| REVISIONS | | | |
|---|---|---|---|
| REV | DESCRIPTION | DATE | APPROVED |
| 02 1 | REVISED DATA TABLE PER ECN 95-0262 | 6/26/95 | S. Morby |
| 02 2 | REVISED | DM 3/15/99 | Tlbag 3/16/99 |

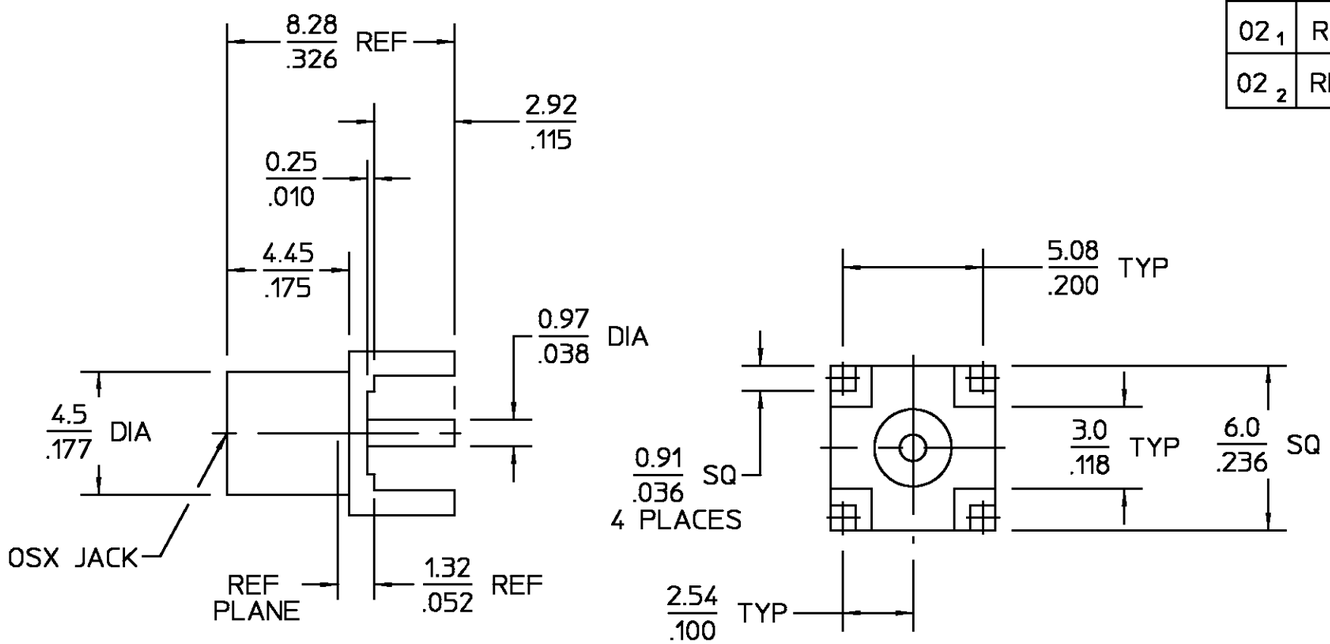


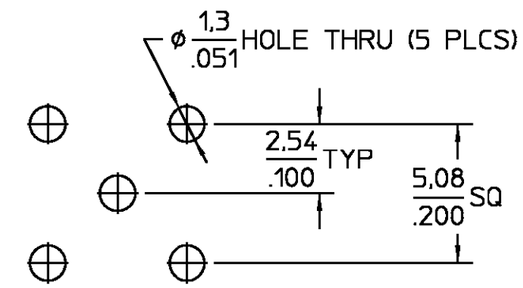


RECOMMENDED MOUNTING HOLE PATTERN

CAPTURED CENTER CONTACT

| ELECTRICAL | MECHANICAL | ENVIRONMENTAL |
|---|---|---|
| Nominal Impedance (Ohms) 50 | Force to Engage: (Lbs) | Temperature Rating |
| Frequency Range (GHz) DC TO 6.0 | 3.4 MAX | -65°C to +165°C |
| Voltage Rating | Force to Disengage: (Lbs) | Vibration |
| (VRMS MAX) 335 @ Sea level | 1.77 MIN - 4.5 MAX | MIL-STD-202, Method 204, |
| VSWR N/A | Center Contact Captivation: | Condition B |
| Insertion Loss N/A | Axial 4.5lbs @ 1 minute | Thermal shock |
| Corona, 70,000 Ft (VRMS MIN) 250 | with .006" displacement | MIL-STD-202, Method 107, |
| D.W.V. | | Condition B |
| (VRMS MIN) 1000 | | Moisture Resistance |
| Contact Resistance | XX.XX = mm | MIL-STD-202, Method 106 |
| Center Contact (Milliohms MAX) 5.0 | .XXX = in | Corrosion |
| Outer Contact (Milliohms MAX) 1.0 | | MIL-STD-202, |
| RF High Potential | | Method 101, Condition B, |
| (VRMS MIN @ 5 MHz) 670 | | 48 Hrs |
| I.R. (Megohms Min) 10,000 | | |

| COMPONENT | MATERIAL | FINISH |
|---|---|---|
| HOUSING | BRASS, PER ASTM-B-16 HALF HARD | NICKEL PLATE PER QQ-N-290 |
| DIELECTRIC | TFE FLUOROCARBON PER ASTM-D-1457 | N/A |
| CENTER CONTACT | BERYLLIUM COPPER PER ASTM B 196, ALLOY C17300, CONDITION H | GOLD PLATE PER MIL-G-45204 |

UNLESS OTHERWISE SPECIFIED DIMENSIONS ARE IN MILLIMETERS TOLERANCE ON DEC ±0.13 ANGLES ± 1°

DRAWN BY K.C.MAHER DATE 10/18/90
CHECKED BY M.Y. 10-19-90
APP'D BY QRL 10-19-90

AMP

AMP Incorporated
140 Fourth Avenue
Waltham, MA 02451-7599

These drawings and specifications are the property of AMP incorporated and shall not be reproduced or copied or used in whole or in part as the basis for the manufacture or sale of item(s) without written permission.

USE ASS'Y PROCEDURE

NO. A.P. N/A

TITLE OSX PRINTED WIRING BOARD JACK RECEPTACLE STRAIGHT TERMINAL

| SIZE | CODE IDENT NO. | | REV |
|---|---|---|---|
| B | 26805 | 5862-5002-10 | 02 2 |
| SCALE 5 : 1 | | | SHEET 1 OF 1 |

CUSTOMER DRAWING

AMP PART # 1060985-1
SHEET 1 OF 1 REV A